DWG NO	SHT	REV
100115	1	1

REV	DESCRIPTION	DATE	APPROVED
1	PROTOTYPE RELEASE	02/01/10	

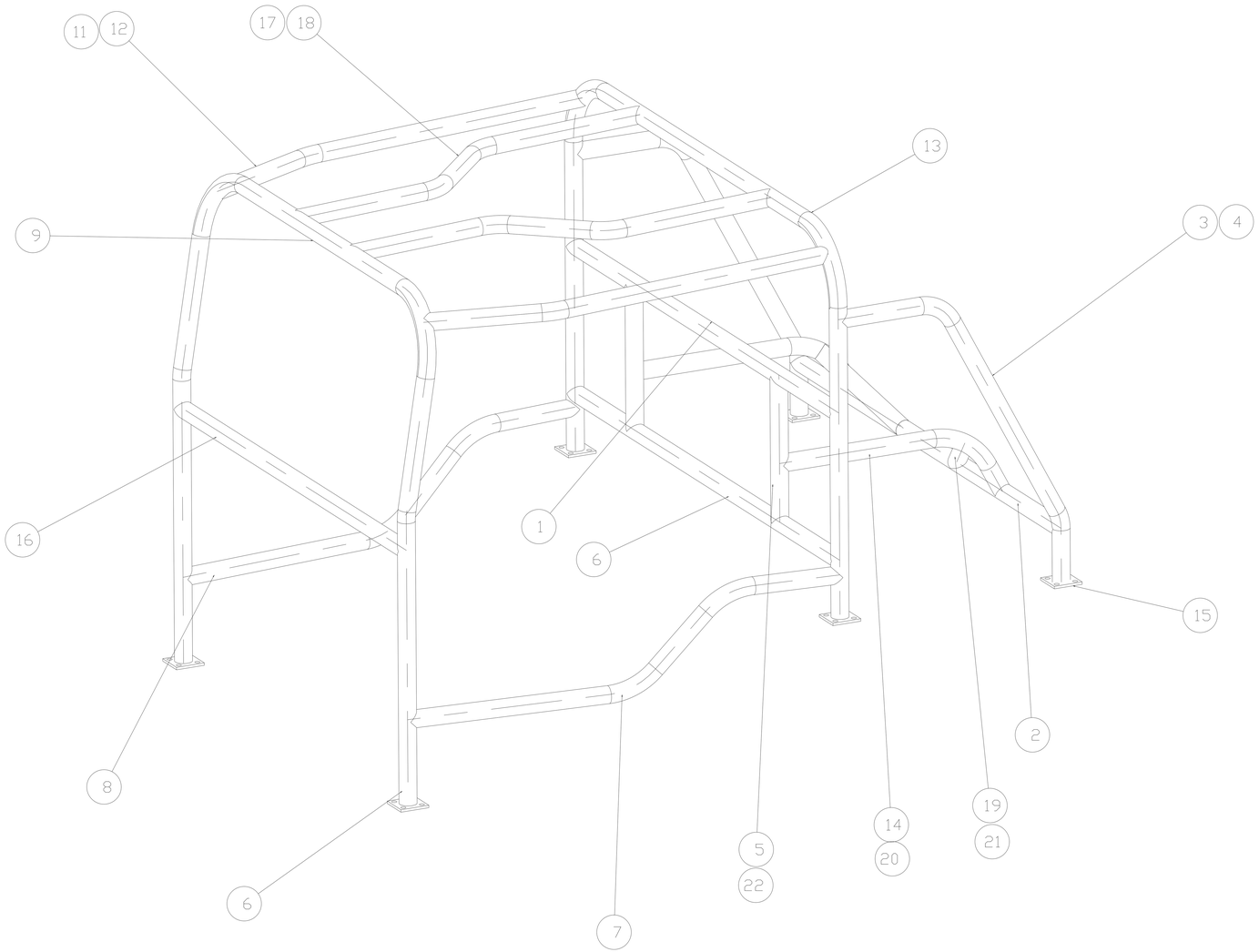

NOTES:

1.) ERCOLINA 030 MEGABENDER USED WITH 3.9: CLR AND 6.7" CLR DIES ACCORDINGLY.

2.) MATERIAL: 1.750 OD X .120 WALL 4340 CHROMOLY TUBING

3.) -7XX / -7XX IS A MIRROR PART. NOTCH DIMENSIONS WILL BE OPPOSITE AS SHOWN.

4.) DIMENSIONS FOR NOTCH'S ARE GIVEN TO THEORITICAL CENTER OF ADJOINING TUBE.
START NOTCH AT THEORITICAL CENTER AND USE A BIT THE SAME SIZE AS THE .O.D OF THE TUBE.

5.) ROLLCAGE DESIGN SHOULD BE MOUNTED TO THE FRAME (NOT PICTURED).

6.) ALL WELDING AND FABRICATION SHOULD BE CONFORMED TO ASTM STANDARD A513-08A

ITEM	DESCRIPTION	PART NUMBER	QTY
23		100115-797	1
22		100115-723	1
21		100115-721	1
20		100115-720	1
19		100115-719	1
18		100115-717	1
17		100115-716	1
16		100115-715	1
15		100115-714	6
14		100115-713	1
13		100115-711	1
12		100115-710	1
11		100115-709	1
10		100115-708	1
9		100115-707	1
8		100115-706	1
7		100115-705	1
6		100115-704	2
5		100115-703	1
4		100115-702	1
3		100115-701	1
2		100115-225	1
1		100115-224	1

NEXT ASSY	USED ON
APPLICATION	

ALL SHEETS ARE THE SAME REVISION STATUS

UNLESS OTHERWISE SPECIFIED DIMENSIONS ARE IN INCHES. TOLERANCES ARE:

DECIMALS .XX ±0.01 .XXX ±0.001 ANGLES ±0.5°

DO NOT SCALE DRAWING

3RD ANGLE PROJECTION

CONTRACT NO.

APPROVALS		DATE
DWG	RR	020110
CHK	DH	020410
ENGR	RR	060109
MFG	CR	060109
CM		
QA	RR	070109
PROJ	DH	010109

PART NO. 100115

pHLUID Inc.
Huntington Beach, CA 92649

TITLE

FJ40 ROLLCAGE
67-84 FJ40

SIZE	DRAWING NO.	REV.
D	100115	1
SCALE 1/20		SH 1 OF 7

MODEL FILE 100115 1.0+
DRAWING FILE 100115 1.0+

INFORMATION HEREIN IS SUBJECT TO THE DATA RIGHTS LEGEND ON THE TITLE OR FIRST SHEET.

BENDING NOTES:

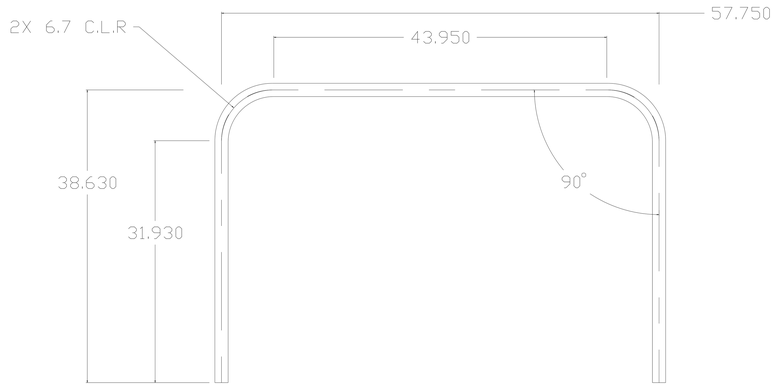

-711
B PILLAR HOOP

-707
A PILLAR HOOP

BEND NOTES:

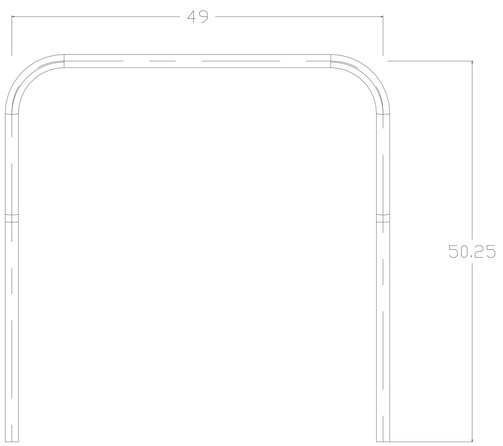

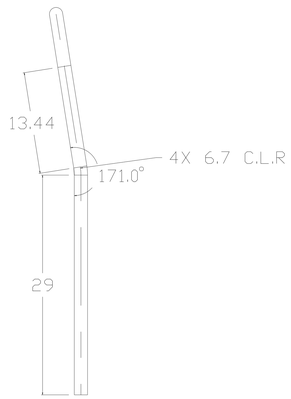

SIZE	CAGE CODE	DRAWING NO.	REV
D		100115	1
SCALE 1/20		SH 2	

MODEL FILE
DRAWING FILE
100115 1.0+
100115 1.0+

INFORMATION HEREIN IS SUBJECT TO THE DATA RIGHTS LEGEND ON THE TITLE OR FIRST SHEET.

BEND NOTES:

-705 / -708
ROCKER PANEL BAR

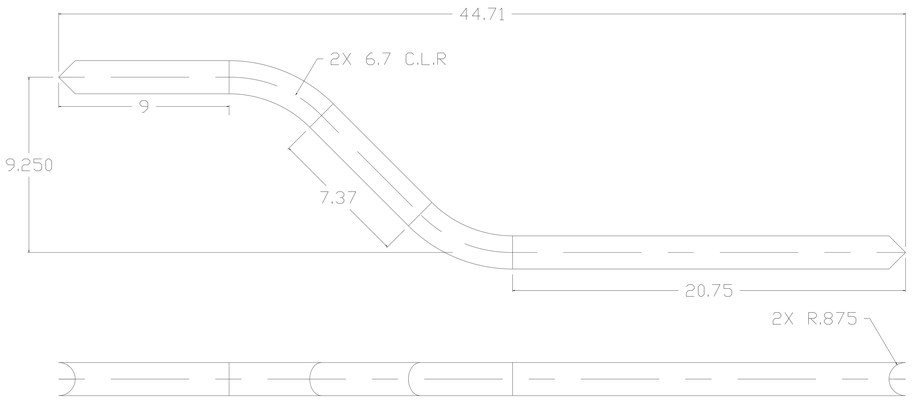

BEND NOTES:

-709 / -710
ROOF RAIL BAR, OUTER

NOTCH LAYOUT

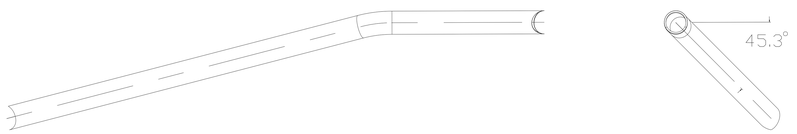

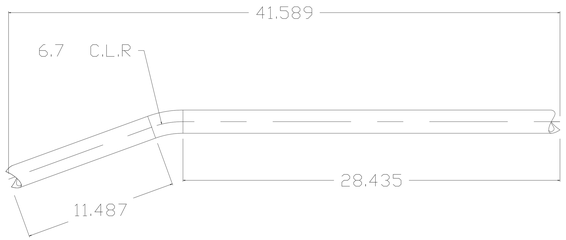



PART NOTES:
1.) -710 SHOWN. -709 IS A MIRRORED PART. ALL NOTCH DIMENSIONS SHOULD BE OPPOSITE AS SHOWN ABOUT CENTERLINE OF PART.
2.) NOTCH VIEWS NORMAL TO NOTCH.

SIZE	CAGE CODE	DRAWING NO.	REV
D		100115	1
SCALE 1/10			SH 3

MODEL FILE
DRAWING FILE
100115-707 1.0+
100115 1.0+

INFORMATION HEREIN IS SUBJECT TO THE DATA RIGHTS LEGEND ON THE TITLE OR FIRST SHEET.

DWG NO 100115 SHT 4 REV 1

-704 / -224 / -225
HORZ STABILIZER



-703 / -723
VERT. STABILIZER

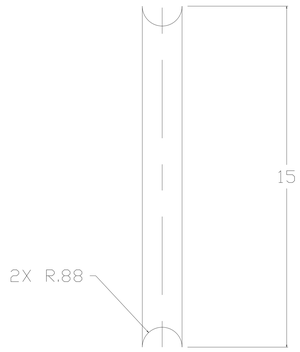

-716 / -717
ROOF RAIL, INNER

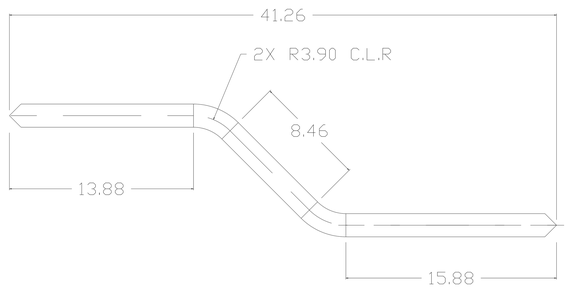



BENDING NOTES:

SIZE	CAGE CODE	DRAWING NO.	REV
D		100115	1
SCALE 3/20		SH 4	

MODEL FILE
DRAWING FILE
100115-705 1.0+
100115 1.0+

INFORMATION HEREIN IS SUBJECT TO THE DATA RIGHTS LEGEND ON THE TITLE OR FIRST SHEET.

-701 / -702
SAIL CROSS TUBE

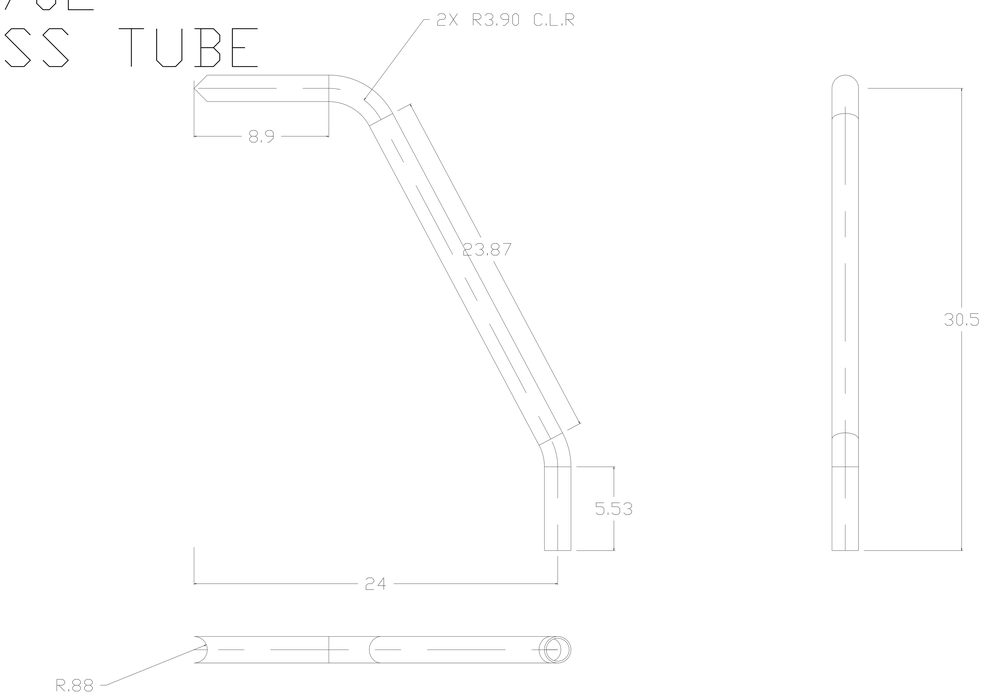

BENDING NOTES:

-713 / -720
REAR CROSS TUBE

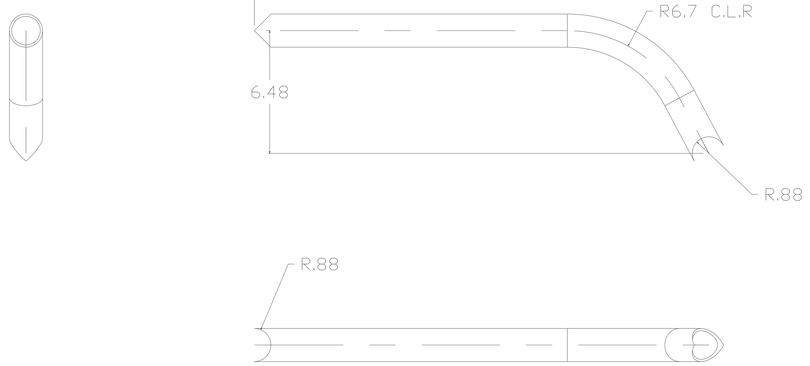

SIZE	CAGE CODE	DRAWING NO.	REV
D	-	100115	1
SCALE 3/20		SH 5	

MODEL FILE
DRAWING FILE
100115-704 1.0+
100115 1.0+

DWG NO 100115 SHT 6 REV 1

INFORMATION HEREIN IS SUBJECT TO THE DATA RIGHTS LEGEND ON THE TITLE OR FIRST SHEET.

-719 / -721
REAR CROSS TUBE GUSSET

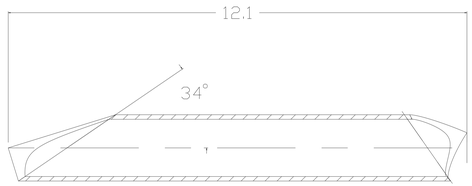

SECTION A-A

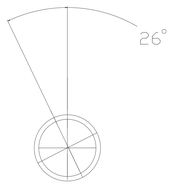

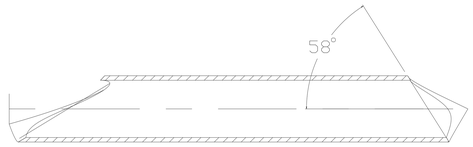

SECTION B-B

-714
FLANGE PLATE



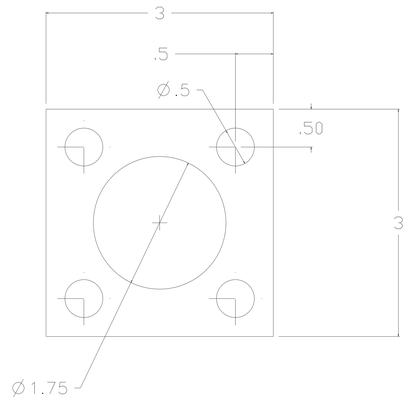

SIZE	CAGE CODE	DRAWING NO.	REV
D	-	100115	1
SCALE 3/20		SH 6	

MODEL FILE
DRAWING FILE
100115-704 1.0+
100115 1.0+

INFORMATION HEREIN IS SUBJECT TO THE DATA RIGHTS LEGEND ON THE TITLE OR FIRST SHEET.

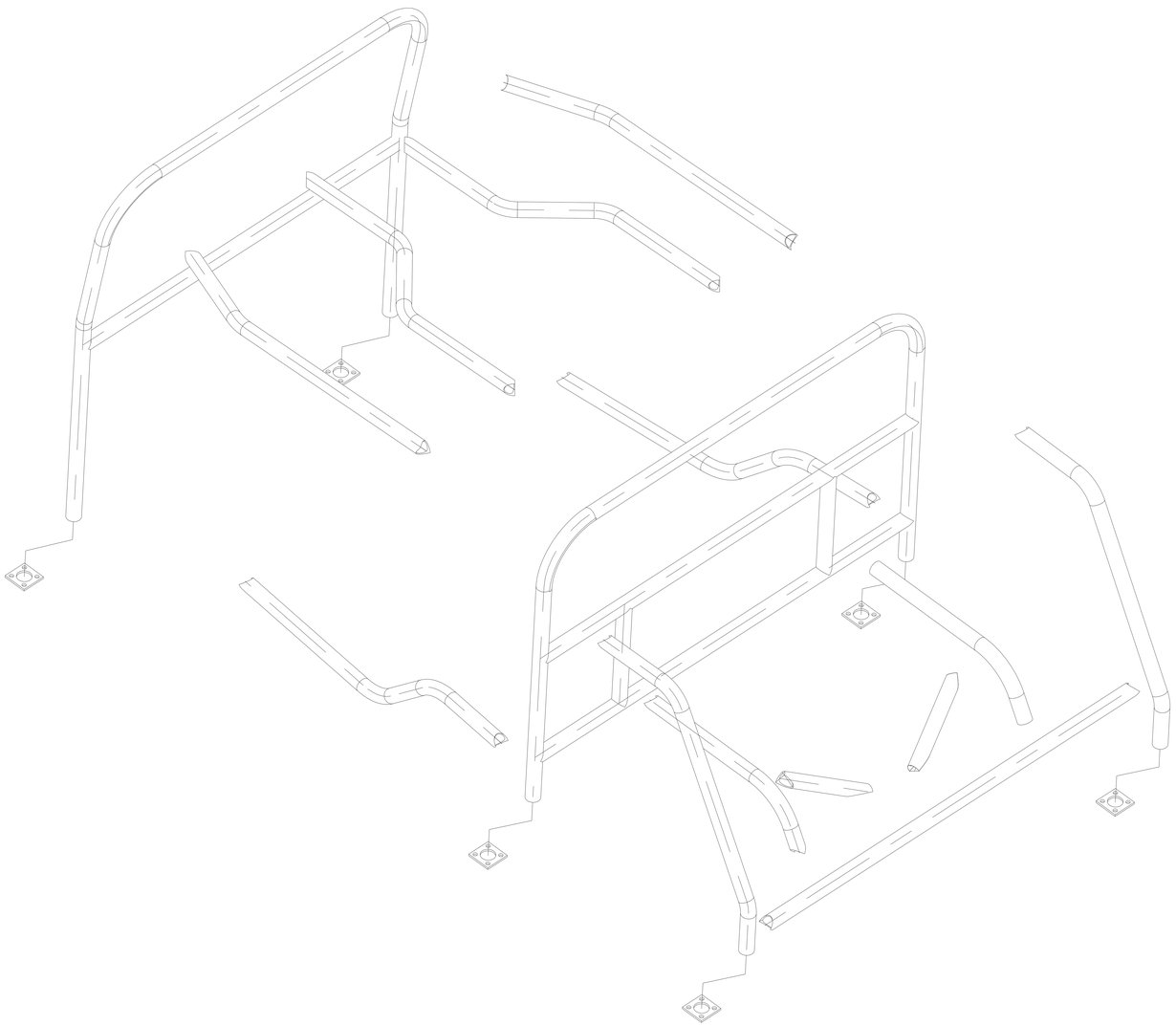

SCALE 1/8

SIZE	CAGE CODE	DRAWING NO.	REV
D	–	100115	1
SCALE 1/2		SH 7	

MODEL FILE 100115-719 1.0+
DRAWING FILE 100115 1.0+